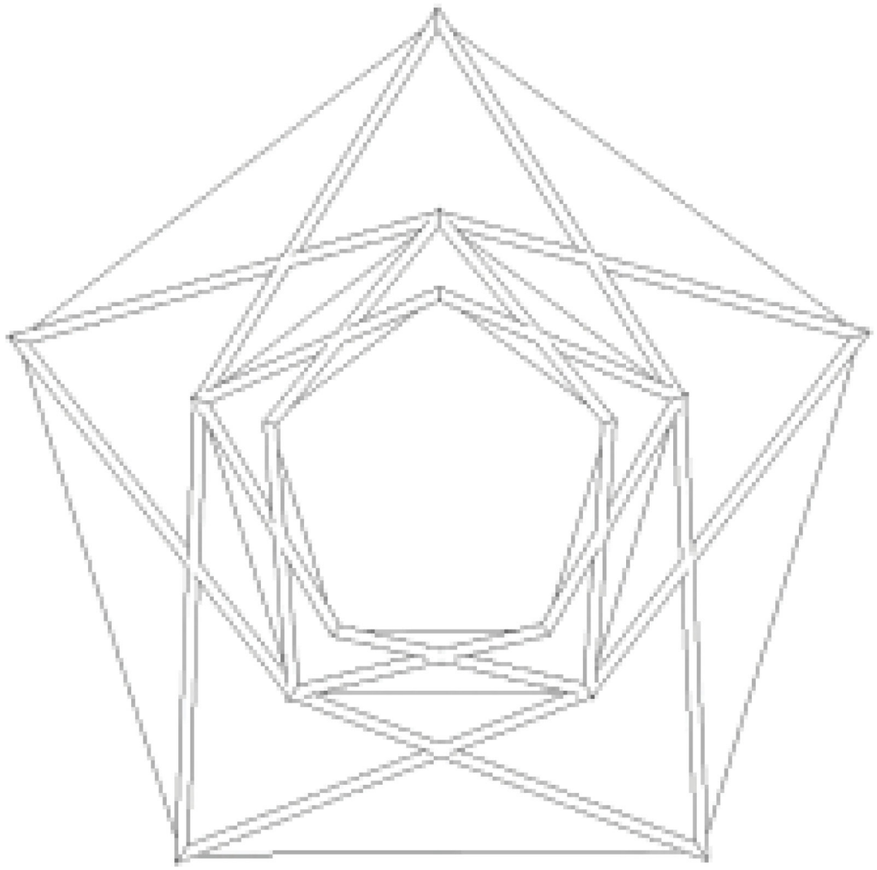

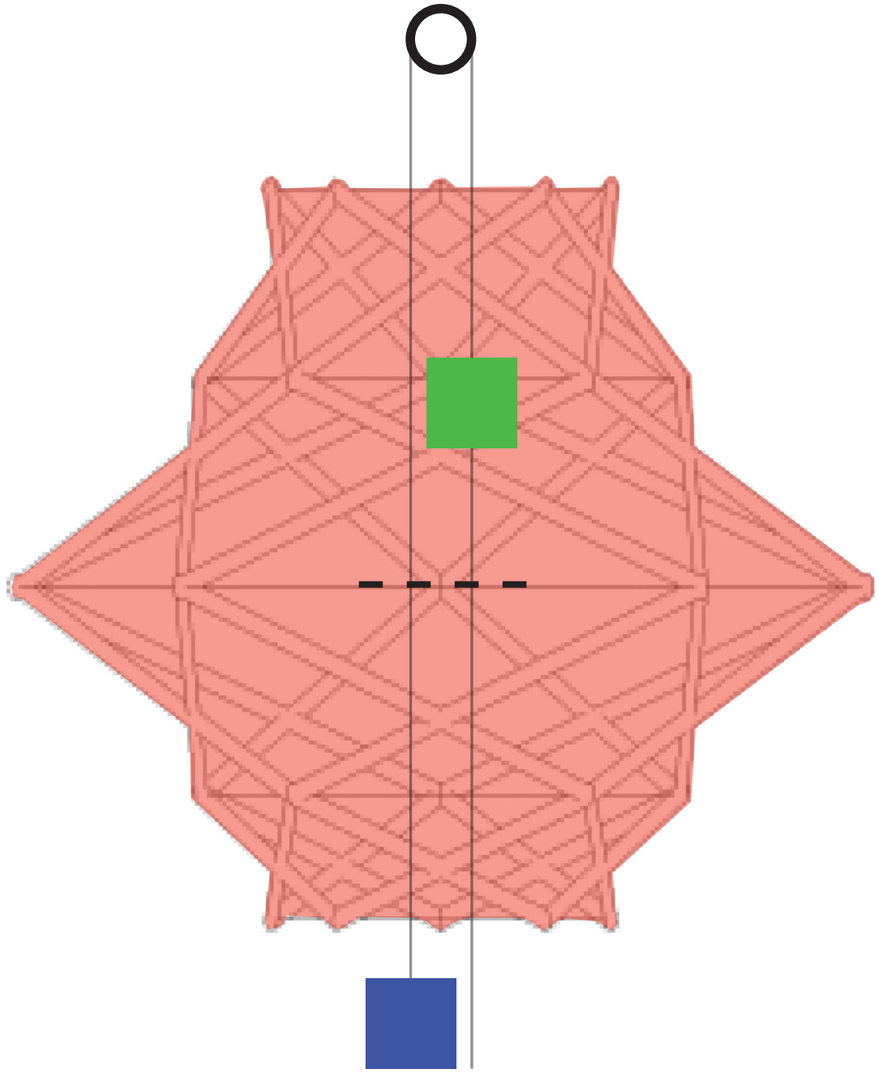

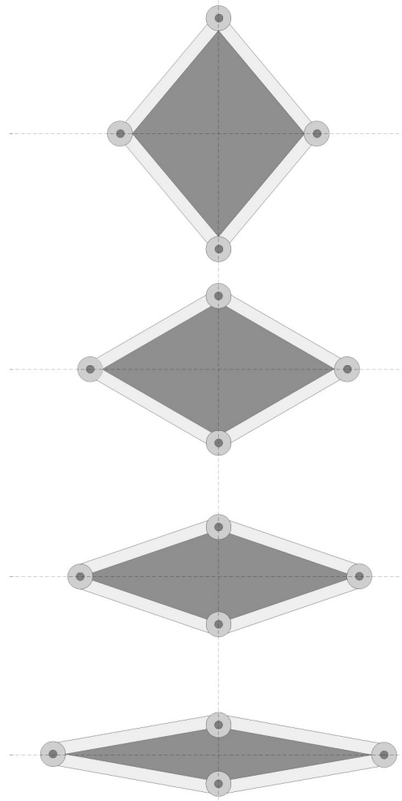

B > A > C

Working on the pavillion for the Experimental Structures we decided to design an equilibrium to open and close the structure.

We found out that it was important to balance the weights (B, C) we would place in the opening mechanism in order to create the equilibrium.

Moreover, the volumes of the weights (B, C) was an important issue as we wanted to be sure that they would not touch the rope.

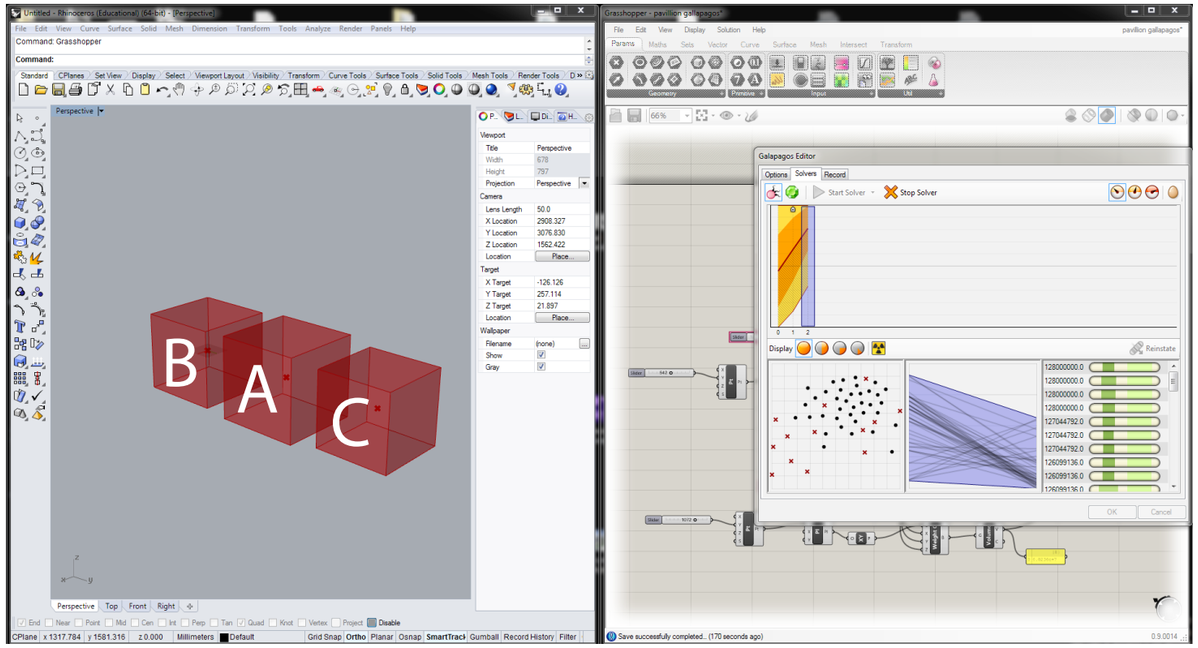

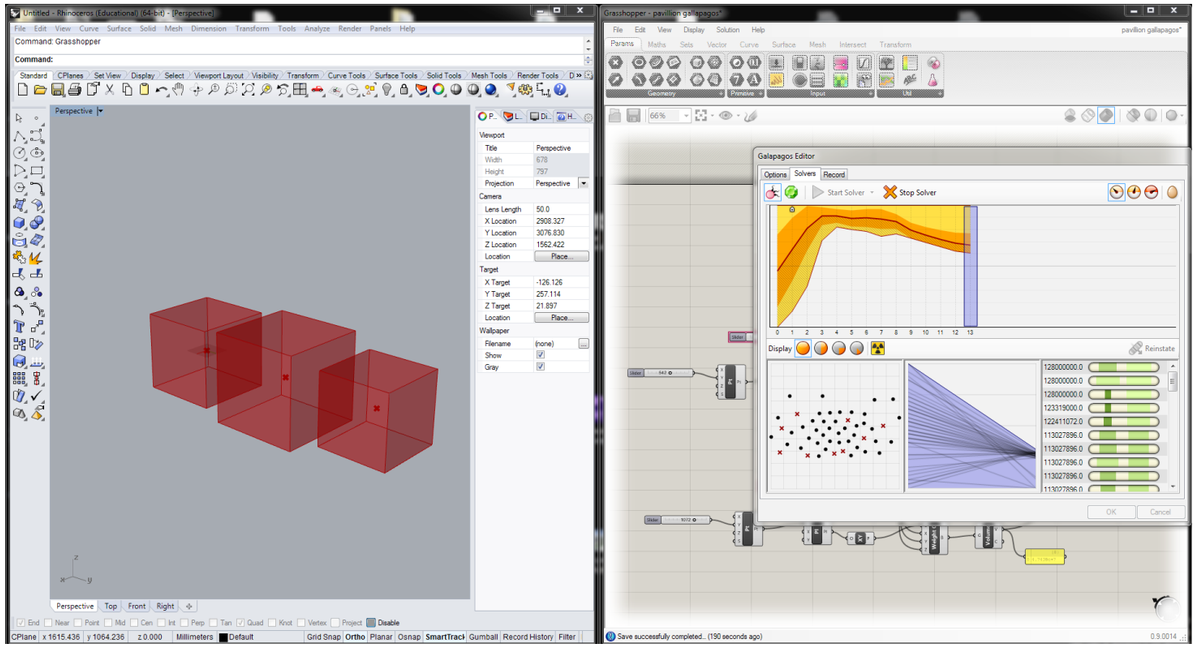

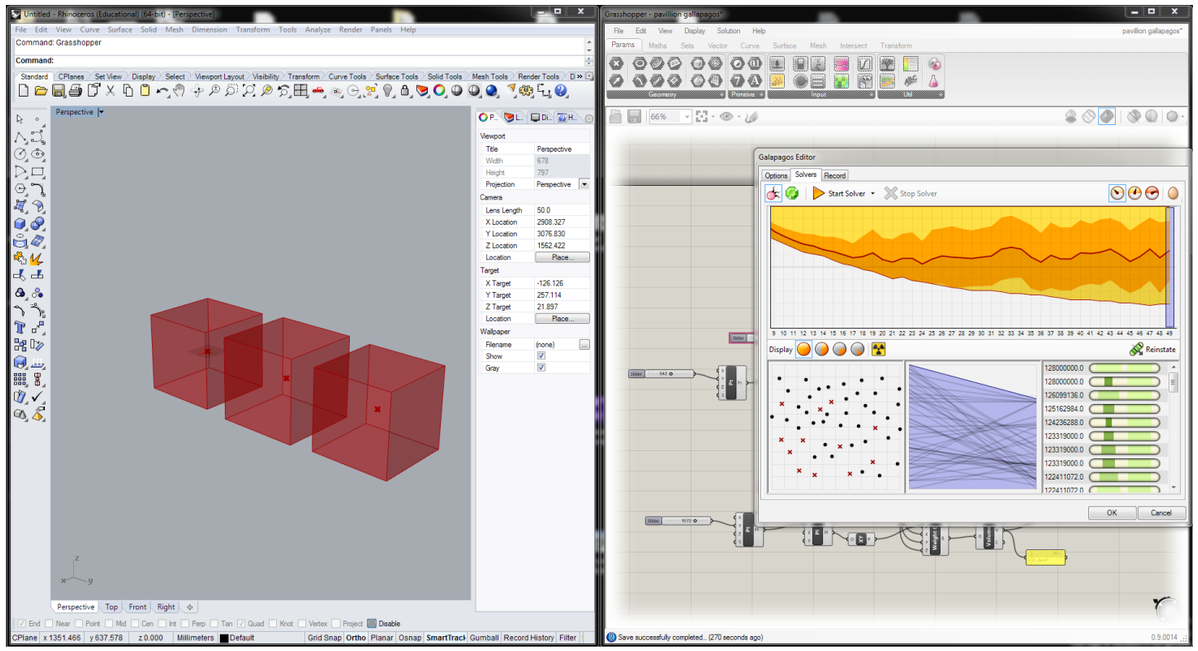

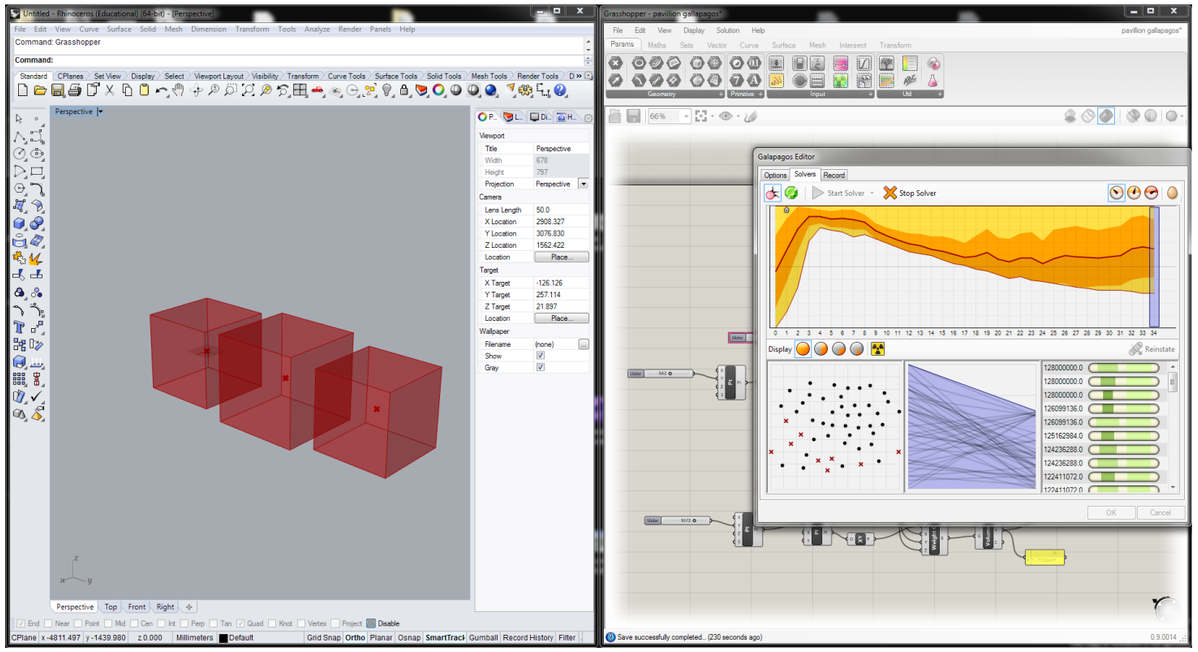

With Galapagos we have the volume and weight A set and the weights-volumes B and C optimized according to the parameters we set in order to have the equilibrium.

Galapagos helped us to have a series of variations of the volumes which serve the equation B>A>C which would balance the weights and make the opening mechanism work.

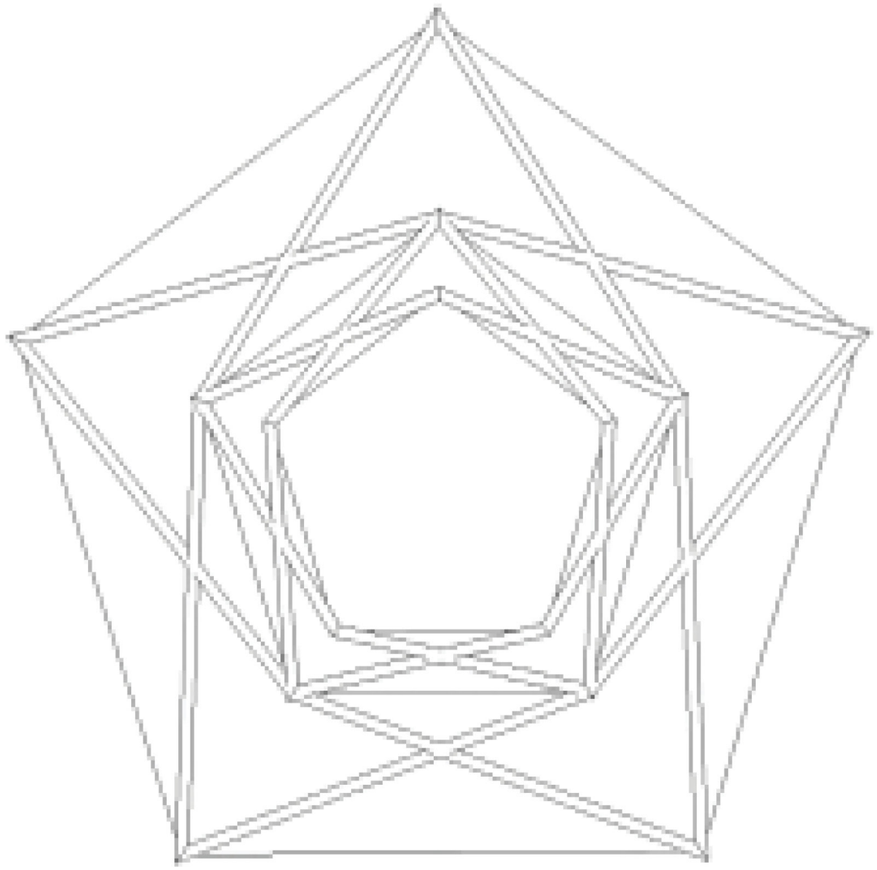

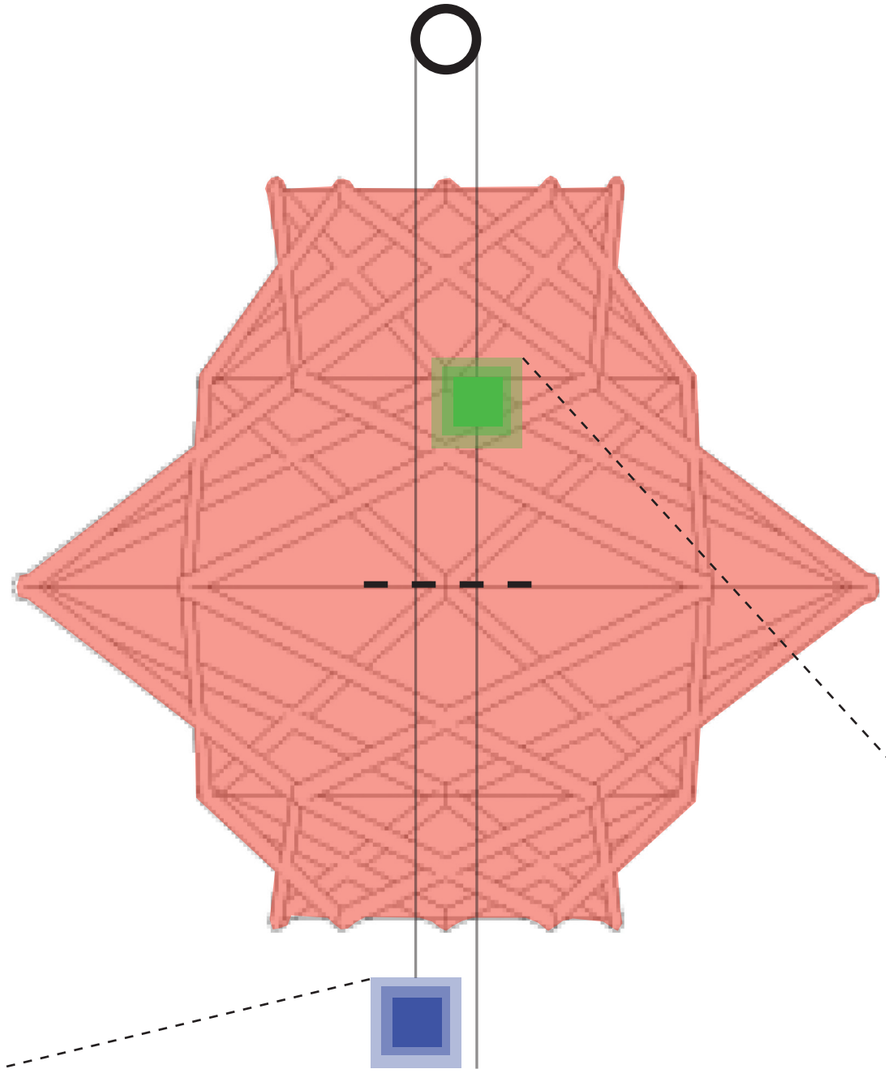

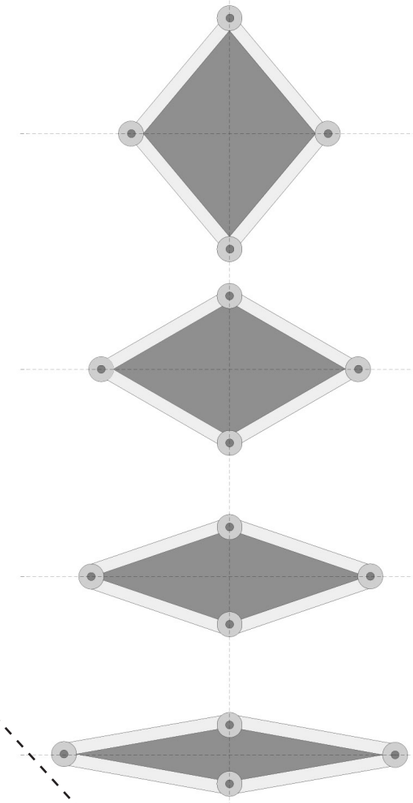

After running and using Galapagos we were able to have variations of different volumes but keeping the same wanted relation between the weights in order to greate the equilibrium.

Also Galapagos helped us to keep the volumes of the weights to some certain maximum dimensions, in order to prevent the weights from touching the rope.